CONTENTS

Commonly Used Tables 1
Armory 5
Venusians 7
The Campaign 9
GM Toolkit 10
- Equipping Characters 11
- NPCs 12
- Psychological Effects + Illusions 13
- Space Suit, Venom & Poison 14
- How to Use Encounter Tables 14
- Venom & Poison Table 15
- Adjusting Difficulty 16

Phase 1: Stumbling in the Rain 17
Phase 2: Back at the Rocket 22
Phase 3: Fighting the Storm 25
Phase 4: Traversing Torrents 29
Phase 5: SD-021. The Sun Dome! 35
Phase 6: Salvation at SD-022 39
Jungle and Waterway Transitions 41

Writing
Marco Serrano & Stephan Serrano

Illustrations
David Simons & Marco Serrano

Jungle Findings	1.1
1-4	Your feet stumble against something. The water gurgles as a Venusian corpse reveals itself. Roll Scavenge Venusians table [**2.1**].
5-9	A spacesuit speckled in mud is propped up against a tree. The half-decayed body of a fellow soldier is inside. If inspected, discover [**PDF Artifact 1**] tucked in the spacesuit. If previously rolled, use 10-11 finding instead.
10-11	Four spacesuits hang upside down like a row of flags in the treetops. You notice the bodies missing, the suits left swaying in the rain.
12-13	Smooth, pitch black berries hang in groups. The size of a little toe, they gleam like marbles. If eaten, roll [**1.2**].
14-15	Plump gray berry bunches grow from the vines dangling above. Their surface is dotted in tiny white seeds. If eaten, roll [**1.2**].
16-17	Oval-shaped berries coated in a furry white skin float in the puddles. If eaten, roll [**1.2**].
18	Black orbs are striped with charcoal. You vaguely remember another soldier telling you about these. If eaten, roll [**1.2**].
19	Roughly netted stone gray berries seem to have a tougher rind. If eaten, roll [**1.2**].
20	Tiny white fruits hang overhead, glowing with varying iridescence. If eaten, roll [**1.2**].

Berry and Frog Effects 1d6		1.2
Black	1	Nothing happens
	2-3	Healing physical effect
	4-6	Positive psychological effect
Gray	1	Negative physical effect
	2-3	Negative psychological effect
	3-6	Positive psychological affect
White, Translucent, or Glowing	1-4	PC consumed by nightmares. Roll [**3.1**].
	5	Nothing happens
	6	Positive psychological effect

Scavenging Venusians	2.1
1-8	Nothing is found.
9-11	Small stone vial filled with white liquid. If consumed, hallucinate and roll [3.1].
12-14	Large stone vial filled with white liquid. If consumed, positive psychological effect or antidote to venom and poisons.
16-17	Small stone vial filled with gray liquid. If consumed, become poisoned and roll [2.2].
18-20	Large stone vial filled with gray liquid. If consumed, positive psychological effect or antidote to venom and poisons.

Venom & Poison Symptoms	2.2
1	White blood cells in your body are destroyed as you experience internal hemorrhaging.
2-4	The victim suffers a storm of seizures. During the episode, they vividly experience a nightmare [3.1].
5-7	Affected skin erupts into painful blisters. They painfully explode when pressured.
8-11	Your nervous system is attacked, stopping nerve signals to the affected area. Local paralysis ensues.
12-13	Severe abdominal pain weakens your body. You vomit, leaving yourself weak.
14-15	Vision blurs and everything seems to be duplicating.
16-17	The affected area swells. Cold sweat and chills take over your body.
18	The gray world around you begins tilting. You begin seeing vibrant colors in distorted forms.
19	Nothing happens.
20	You feel the venom/poison quickly transporting through your bloodstream. Your eyes widen as you feel stronger and your senses heighten.

Hallucinations and Nightmares 3.1

Suffer a negative psychological effect after rolled experience.

1-2	Your arms are gelatinous. The rain drills holes through your goopy limbs. Your vision is distorted, like looking through fisheye lenses. A dark vignette clamps around your sight.
3-4	There's a thrashing in your chest. It's hot and beats against your bones travelling upwards. You begin to gag as a giant tapeworm escapes your mouth.
5-6	You snap awake lying face up. When you try to stand, your legs won't respond. Nothing is responding. Your eyes burn like they've been open for some time. A huge spider looms over. You can feel its venom being injected into your veins.
7-8	Your boots sink further as you run through the jungle. Sludge slithers through the trees behind you. Soon, your boots are unable to lift from the mud and the sludge surrounds your body. You are unable to breathe and the world is black.
9-10	Your neck cranks back slowly with an open jaw. The rain beats at your tongue. Teeth crack and decay as the water slowly suffocates you.
11-12	The water warms around your ankle, wriggling up your bare legs. Suddenly, you are swept away through meters of water. You close your mouth trying to stop the water from overtaking you. Webbed fingers force otherwise, as water floods your lungs.
13-14	Walking into the sun dome you feel alive. The sun's warmth fills the room as you hug your comrades in a heroes' welcome. Their embrace tightens. More soldiers, waiters, and caretakers pile on top, smothering you beneath their weight.
15-17	You see a familiar rocket penetrate the clouds overhead. It's low and looks like it's on a landing trajectory. As you watch, the nose redirects as if targeting the ground beneath you. It rapidly approaches, taking up your entire vision. You feel a sense of relief as your agony is incinerated in the crash.
18-20	The rain falls harder. It's heavy and sharp like rocks. Pinned against the ground, it pummels you. You scream as the rain cracks your bones.

Venusian Traps 4.1

Traps can be used in any phase. Phase 2 and 4 have designated areas marked with yellow circles for trap locations.

1-5	Poison spore traps (hidden in bundled grass)
6-10	Urchin mines
11-15	Spiked pitfall trap (4 ft, full of water)
16-20	Crushing iridium stones

Poison spore traps 4.2

> **Triggered:** When players walk through tall grass housing the trap. 2-ft radius. If exposed, roll **[2.2]**.

> **Hidden:** Wrapped tightly in cordgrass still rooted in the ground. Tucked away at chest height.

Urchin mines 4.3

> **Venomous spines:** Pierces through anything that steps on it. Causes poison damage **[2.2]**.

> **Hidden:** Placed under debris, in creeks, shallow waterways, or other narrow pathways likely to be trodden on.

Spiked pitfall trap 4.4

> **Sharpened poles:** Sharp wood and iridium poles sticking out from the bottom and sides of the 6 ft pit. Causes piercing damage.

> **Hidden:** Dug in clearings or narrow passageways. Concealed by debris.

Crushing iridium 4.5

> **Dense and Heavy:** 7-inch rigid cube weighs ~240 lbs. Bludgeoning damage.

> **Triggered:** When the support is slightly disrupted.

> **Hidden:** Balanced on doors left slightly ajar.

What You Find On Dead Soldiers 4.6

1	Booby-trapped **[4.1]**	11-13	Tactical hunting knife
2	Severed arm	14-15	"The Mantis" pistol
3-4	Pain pills	16-17	Med kit
5-6	A vial of cyanide	18	One grenade **[6.2-6.4]**
7-8	Binoculars	19	Syringe labeled Crustacea No. 15 **[6.5]**
9-10	20 ft corded rope	20	Proton Musket IV

Armory of Constant Downpour 5.1

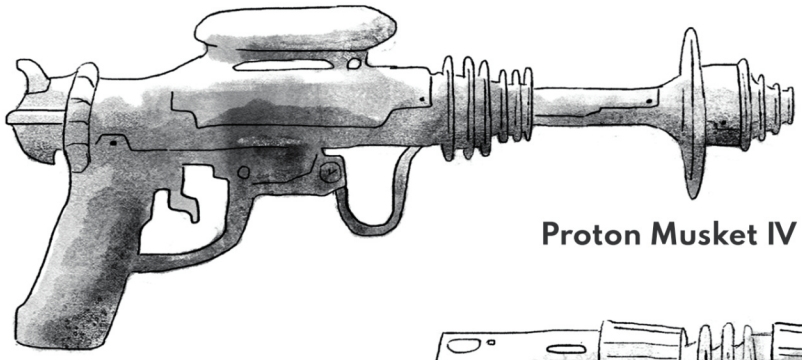

Proton Musket IV

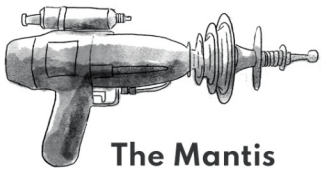

The Mantis

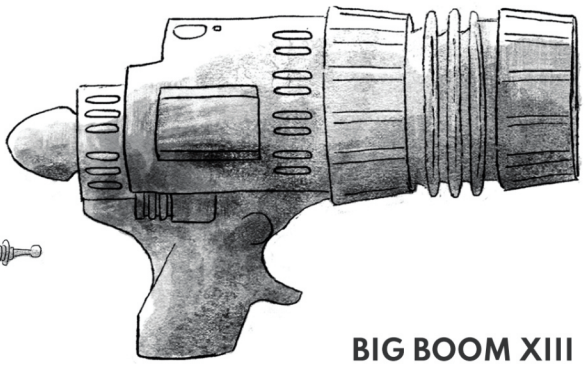

BIG BOOM XIII

The Mantis 5.2

> **Standard Issue:** Compact ray pistol and able to dual wield. Fully charged battery can generate 10 shots.
> **Damage:** Low-medium damage. Able to take out Venusian Soldiers in 3-5 shots.

Proton Musket IV 5.3

> **Powerful pew-pew:** Two handed ray rifle capable of concentrating laser output. Fully charged battery holds 6 shots.
> **Damage:** Medium-high damage output. Able to take out Venusian Soldiers in 2-3 shots. Piercing.

BIG BOOM XIII 5.4

> **One-Shot and Self Destructive:** A bulky sonic blaster so strong it dismantles itself when shot. Creates a 5 meter blast radius.
> **Damage:** Very high damage. Will take out a Venusian Soldier in a single shot. Limited range of 5 meters.

Armory of Constant Downpour 6.1

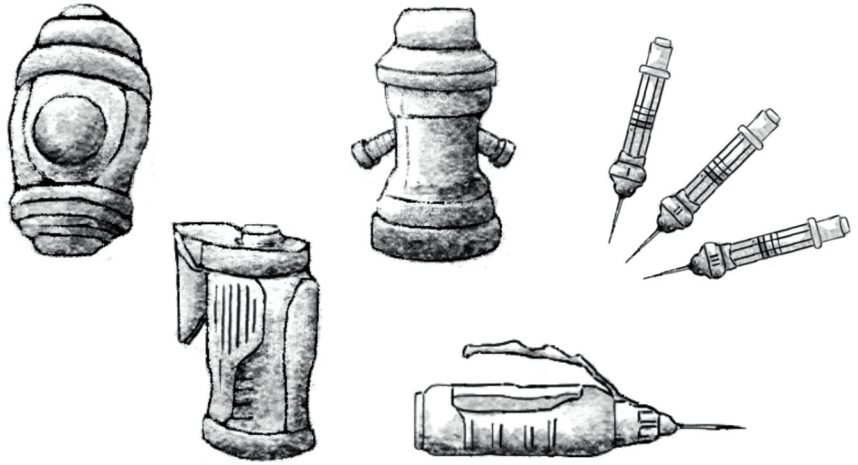

Paralysis grenade 6.2

> **Dipped metal shrapnel:** Paralytic concoction of gelsemium, alien plants, and frog toxins. 20 meter radius.

Miss VE's grenade 6.3

> **Violent Explosions (VE):** Can be used to blast through walls. 5 meter radius.

Concussion grenade 6.4

> **Blinding and loud:** Produces a flash of 8 megacandela and an intense bang of 180 decibels. 3 meter radius.

Crustacea No.15 6.5

> Minimizes damage taken and impervious to falling damage.

> 2-minute effect.

Bolt No.22 6.6

> Increased evasiveness and accuracy.

> 1-minute effect.

Hulk No.17 6.7

> Can wield iridium weapons, hurl objects across long distances, and leap 15 feet.

> 2-minute effect.

Venusian Complete No.29 6.8

> All three stim-pack effects.

> 1-minute effect.

> Will lose half of max life after effects wear off. Even if it would cause death.

VENUSIANS

Venusians are a water-land humanoid species. They are characterized by an aerodynamic frame, bi-modal breathing, webbed appendages, and a hard exoskeleton that protects them from the constant downpour.

Naturally slender, Venusians are built for agility. Aquatic adaptations allow swift and nimble movements through the water.

Their underdeveloped sight is enhanced with some type of sonar and doesn't seem to impede their ability to hunt human soldiers.

Iridium stone is central to Venusian society. The stone is incredibly dense and can be formed into sharp blades.

Recovered 6-inch knives weigh 20 pounds and can cut through steel.

[7.1]

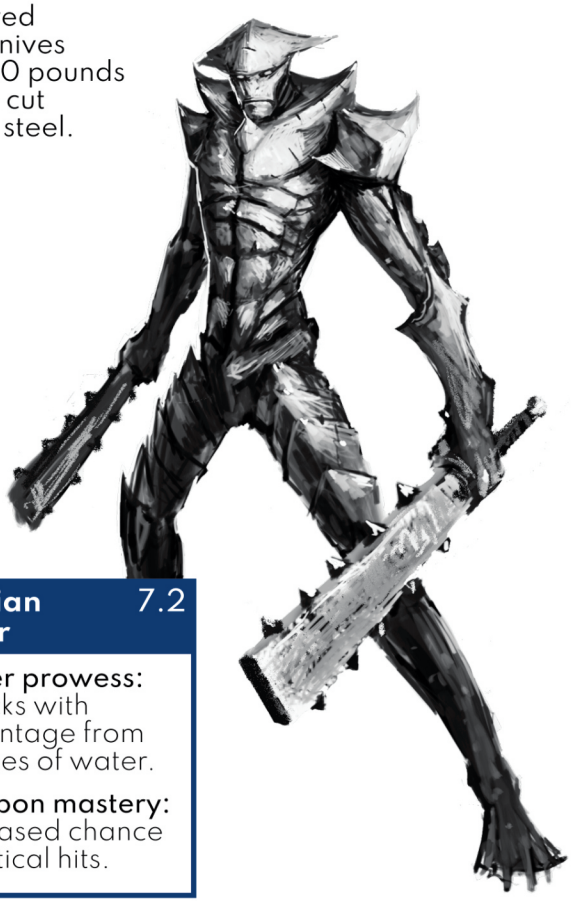

Venusian Soldier 7.2

> **Water prowess:** Attacks with advantage from sources of water.

> **Weapon mastery:** Increased chance of critical hits.



Venusian Scout 8.1

> **Water prowess:** Attacks with advantage from sources of water.

> **Nimbleness:** Difficult to see or hear coming.

> **Disengaging:** Will attempt to retreat from combat and alert larger forces of the PCs location.

Venusian Tank 8.2

> **Knockdown:** 1 in 2 chance to knockdown on a successful hit.

> **Resilient:** Does not take additional damage from critical hits.

> **Fight to the death:** High moral (less likely to retreat).



Venusian Tanks

Through an unknown process, Venusians transform into massive "tanks". These Venusians nearly double their size and quadruple their muscle density. Bone spurs emerge from their chest and shoulders and their dominant arm morphs into a sharply pointed pincer.

Venusian tanks lose some mobility, but gain substantial strength and durability. They are much more difficult to kill.

[8.3]

THE CAMPAIGN

Constant Downpour is a sci-fi thriller based on Ray Bradbury's short story, "The Long Rain".

The campaign takes place on Venus. Most soldiers deployed there become insane from the constant downpour, lack of sleep, and hallucinations caused by the atmosphere. Others die at the hands of Venusian soldiers, fall victim to lethal traps, or the horrors of the planet itself.

In Constant Downpour, players are Space Military soldiers who have just been dispatched to Venus in response to a distress call. SD-021, a sun dome located deep in the Venusian jungle, is under attack and requesting immediate backup.

Players were meant to land near SD-021. That didn't happen.

Their rocket crashed. Ejection procedures left them stranded in the jungle.

At the start of play, players have just cut themselves free of their harnesses tangled in the canopy above. Ray is the only party member who has been here before, but they all know the lethality of the mission.

On Venus, the rain is relentless. The soaked ground prevents sleep. The sun is blocked out by overcast clouds and the thick, gaseous atmosphere. Everything is grayscale. There is no such thing as sunshine or "fresh food". Only more rain, more chaos, and the constant threat of ambush.

Sun domes are man's answer to the harsh environment. At their center is an artificial sun, allowing Space Military forces to take shelter, grow food and recover in the only real source of warmth on the planet.

Spacesuits ripped and tattered and with minimal supplies, **players need to find SD-021. Not only to save their fellow soldiers but to save themselves.**

What Makes the World Different 10.1

- **"Constant Downpour" takes place on Venus.** It storms constantly, and as a consequence, the planet is covered in water. The height of water ranges from ankle to waist deep, pools are unknown depths, and waterways stream forcefully. GMs are encouraged to make movement taxing, and certain situations may require players to exert a lot of energy to retreat.
- **There is little opportunity for rest and renewal.** GMs may opt to restrict short rests, long rests, and other healing as a result of fatigue and the environment.
- **Most creatures on Venus do not want to engage with PCs.** By default, creatures act defensively if PCs engage them or encroach on their territory. **In contrast, Venusians actively hunt PCs.**
- **Mental affliction causes PCs to experience illusions.** Throughout "Constant Downpour", illusion descriptions and encounters are marked [I]. GMs may convert any description or encounter into an illusion, or have any illusion made "real". See [13.2].

How Strong Are Players 10.2

Constant Downpour is intended for low-level characters with standard equipment. Players must make intelligent decisions on whether to continue engagement or escape to cover. Optionally, characters must overcome ongoing psychological and physical effects.

EQUIPPING CHARACTERS

What Players Know 11.1

- While navigating to SD-021, your rocket's reaction control system began failing. The rocket began to nose dive, and players were forced to eject immediately. Two soldiers on the ship were unable to eject properly.
- The surviving crew landed somewhere in the jungle, and know the general direction of both the rocket's crash site (NW) and SD-021 (SW).
- Most soldiers go insane or die on Venus. Being stranded outside of the sun dome is extremely dangerous and most commonly results in a completely dead crew.
- The only way to survive Venus, or even rest, is by finding a sun dome.
- It's a mystery why Earth still sends missions to Venus.

Suggested Starting Equipment 11.2

- Spacesuit, torn and tattered
- The Mantis, a ray gun pistol
- A 2-inch metallic cube (inflates to a large raft, able to carry the entire party. Limit 1 per party).

Optional Equipment Players May Start With 11.3
1. Tough gloves
2. Bottle of pain pills
3. 40 ft. corded rope
4. Tactical hunting knife
5. The Mantis (extra pistol) **[5.2]**
6. Proton Musket IV **[5.3]**
7. Paralysis grenade **[6.2]**
8. Concussion grenade **[6.4]**

NPCs

Ray 12.1

One of the few survivors of the first Venus missions. Superstitiously keeps his outdated weapon, believing it is the only thing that led him to survive. Familiar with SD-021. **Paranoid. Skittish. Easily excitable. Smoker's voice.**

> **Where:** Deployed with the party at the start of campaign.

> **Use:** Ray represents the reality of going insane on Venus. He shares true and false memories of horrible things that happened to fellow soldiers on his last expedition. If GMs decide to not use Ray, they will need to alter the "narration" segments.

  > Optionally shares knowledge of Venus including Berries/Frogs **[1.2]**, Venusian traps **[4.1]**, and/or Venusian Vials **[2.1]**. Doing so will make the game easier.

> **Combat:** Decommissioned Mantis v1. Low damage output against all enemies.Keeps a hidden Miss VE's grenade tied to his thigh in case of emergencies.

Colonel Aleksi 12.2

Claims he personally led several rescue missions searching for PC's when he saw their rocket crash. **Firm. Charismatic. Cuts off characters when they mention stress, horrors they experienced, or question the mission.**

> **Where:** SD-022 at the end of Phase 6.

> **Use:** Alternate resolution of campaign. Colonel Aleksi shuts down allegations and reinforces the importance of being on Venus. Removes dissenting soldiers. May try to secretly pick off players if he suspects they don't trust the Space Military.

> **Combat:** Duel mantis pistol with damage augmentations causing medium-heavy damage.

Private Juniper 12.3

A young soldier stationed at SD-022. Juniper questions why traveling soldiers regularly vanish once they reach the sun dome. **Well-calculated. Cautious. Sympathetic.**

> **Where:** SD-022 at the end of phase 6.

> **Use:** Alternate resolution alongside Colonel Alexi. In private, Juniper gives warnings that the players may not be safe at SD-022 because traveling soldiers regularly disappear. She reinforces suspicions raised from the PDF Artifacts.

> **Combat:** Mantis pistol. Evasive. Fast to fire. Highly accurate.

Psychological Effects (Gaining Stress and Losing Sanity) 13.1

Constant Downpour works best with sanity and/or stress mechanics. While we use the terms "negative psychological effects" and "positive psychological effects", we encourage GMs to adapt consequences to system specific rules.

Negative psychological effects could require players to pass a sanity check, lose sanity, gain stress, roll at a disadvantage, or any other negative consequence.

Positive psychological effects can remove the negative psychological consequences players are currently suffering from. They may also renew energy or heighten focus.

Illusions 13.2

Mental affliction is a core theme of "Constant Downpour". PCs develop mental affliction from both the environment and the horrors of Venus. In addition to the negative consequences above, mental affliction causes the players to suffer "illusions".

Illusions are a special type of hallucination caused by the players going insane. **PCs believe they are in combat. Instead of taking physical damage, GMs are encouraged to assign relevant negative psychological consequences detailed above.**

Illusions are marked [I].

GMs who don't want to play with this angle may easily convert any illusion encounter into a physical one, removing the concept from the scenario.

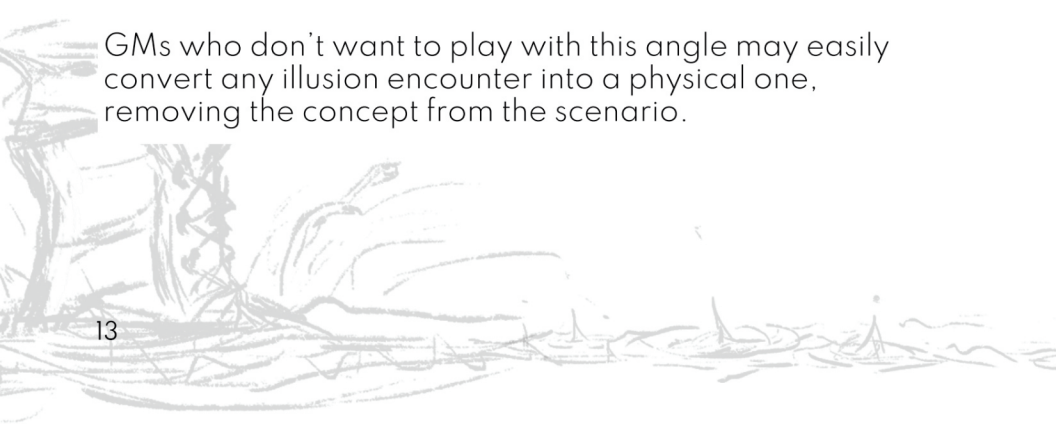

The Space Suit, Venom, & Poison 14.1

True to "The Long Rain", spacesuits worn by players afford only a small level of protection. The spacesuit itself is constantly pierced, cut, ripped, and generally torn apart. We imagine the spacesuits to be tattered with rips exposing parts of the hands, arms, and legs.

This makes players susceptible to contracting venom and being harmed by the environment. With retro sci-fi roots, this is not a problem for breathing.

How to Use Encounter Tables 14.2

All tables run off of 20-sided dice (d20).

Difficulty (Dif) - For GM use, encounters have a suggested difficulty ranging from 1-3. This assumes players have very few opportunities to heal or take rest.

- **Level 1:** Encounters are non-threatening. In most cases, players will not lose hit points nor suffer negative psychological effects. GMs may choose to roleplay through these encounters.
- **Level 2:** PCs are likely to incur 10-30% damage over 1-2 rounds of combat.
- **Level 3:** Encounters contain one or two scary moments. Players may need to use healing resources if available or retreat to avoid death.

Example Encounter Table 14.3

d20	Dif.	Threat
1-8	1	Trees crashing down on players from above.
9-15	2	Rapidly forming, flesh-eating moss.
16-20	3	Venusian scout pair. If beaten, roll twice on **[2.1]**.

Venom & Poison Table 15.1

Venom and poison are constant threats. Venusian toxins give humans various reactions detailed on the "Venom & Poison Symptoms" table [2.2].

GMs are encouraged to convert the descriptions into system-specific consequences. Some examples of conversion include:

- **Hemorrhaging:** player takes damage
- **Suffers seizures:** player may lose a round of combat
- **Local paralysis:** limits actions that may be taken
- **Vision blurs:** causes a disadvantage during combat

Toxin Duration and Ongoing Effects: Poison and venom effects default to a single symptom that lasts 5-15 minutes.

To increase the severity of toxins, GMs may choose to give ongoing effects to venom and poison. Examples include:

- **Persistent Symptoms:** Once the venom or poison effect is rolled on table [2.2], the effect stays with the player until healed.
- **Evolving Symptoms:** The affected player's symptoms will worsen every 5-15 minutes until healed. Use table [2.2] to assign players mild symptoms to start, and more severe symptoms as the toxin develops.

Antidotes: There are three scarce antidotes:

- **Medical kits** can be found in Phase 2 and Phase 5 with clearly marked antidote viles.
- **Berries [1.2]** have a percentage chance to heal physical effects such as venom or poison.
- **Large stone vials [2.1]** can be found on dead Venusians and can be used to heal toxic effects.

Adjusting Difficulty 16.1

GMs can change the difficulty level of Constant Downpour with the following dials: Rest Permitted, Illusions, Venom/Poison. **Default settings are bolded in yellow.**

Additionally, GMs may situationally allow their party to find berries, frogs, or items to help PCs survive. [1.1], [1.2], [2.1].

Adjusting Difficulty 16.2

Dial	Easy	Hard	Very Hard
Rest Permitted	Full rests available during Phases 2 and 5.	**Partial rests available during Phases 2 and 5.**	No rest allowed.
Illusions	Ignore psychological consequences from illusions.	**Illusions cause negative psychological effects.**	Ilusions cause negative psychological effects, including when PCs realize The Storm and an unbroken SD-021 are illusions.
Venom/ Poison	**Only short duration symptoms.**	A few persistent or evolving symptoms.	Many persistant or evolving symptoms.

PHASE 1: STUMBLING IN THE RAIN

Narration 17.1

You crash to the jungle floor. Shin deep water splashes your tattered and torn spacesuit, leaving it speckled in mud. Some 5 meters above, your chute and harness whip in the wind.

The rain bears down. Ray begins to shiver. His cigarette-laden voice cracks, "It's worse than my nightmares." You look to where he is pointing. The leaves melt away as the rain pummels down.

Environment 17.2

After cutting yourself free from the jungle canopy, you find yourself in front of a clearing edged by 7-foot ferns and reed grass. The grass bundles together as if trying to protect itself from the rain.

The rocket, and the supplies it carries, crashed miles Northwest. SD-021 and the endangered soldiers lay somewhere South of the crash site.

Facilitating Phase 1 17.3

- Players will choose whether to risk gathering inventory at the crashed rocket **[Phase 2]** or seek safety by traveling towards the sun dome **[Phase 4]**.
  - The "Jungle Exploration Map" **[19.1]** represents jungle terrain for either direction and players will reach their desired destination after Step 7.
- The "Jungle Exploration Map" **[19.1]** is made up of Steps 1-7.
- When players move into a Step, the GM may choose to share a description from the corresponding jungle description table. **[19.2]**, **[19.3]**, **[20.1]**.
- Encounters are found in steps 1, 4, 6, and 7. Roll **[20.2]**.
- When players search the jungle, the GM will decide if they succeed in finding something **[1.1]**.
  - **It is encouraged to have players stumble upon [Artifact 1] before the end of the phase.**
- GMs can manipulate the difficulty by giving players combat disadvantages based on jungle density.

Small Clearing Encounters 18.1

d20	Dif.	Threat
1-6	1	Throng of armored locusts. If sprayed, roll **[2.2]**.
7-12	1	Alien leeches barring razor sharp teeth.**[I]**
13-18	2	Behemoth toad. If touched, roll **[2.2]**.
19-20	2	Sludge horror (Sentient compound of Venusian soil and bacteria. Regenerates against attacks) If wrapped up by, roll **[3.1]**.

Armored locusts 18.2

> **Behavior:** Frightens easily. Reflexively shoots themselves towards danger attempting to get behind them. Emits small poison clouds as they fly.

> **Poisonous:** If sprayed, roll **[2.2]**.

Behemoth Toad 18.3

> **Behavior:** Slinks around like a velociraptor while hunting. Will cock its head with wide eyes waiting for a reaction.

> **Cornering:** Leaps over players to cut off escape.

> **Poisonous skin:** The rain beats holes in the toad, which regenerate in huge venom-filled warts. If touched, roll **[2.2]**.

> **Acid tongue:** 15 ft tongue with acidic saliva.

Alien leeches [I] 18.4

> **Illusion:** Players suffer psychological damage.

> **Burrowing:** Eats in spirals as they sink into players' bodies.

Sludge horror 18.5

> **Surrounds and causes hallucinations:** The sludge envelops living things causing them to hallucinate. Rolll **[3.1]**.



MAP KEY [19.1]		
	1E	Roll Small Clearing Encounter [10.1]
	2, 3, 5	Share from "Description Tables" only
	4E, 6E, 7E	Roll Jungle Encounter [14.3]
	After 7E	End of the jungle. Players reach the destination they chose at the start of Phase 1.

Narrow Walkway Descriptions 19.2

1. Vines sway rhythmically overhead. Occasionally you hear a snap when a vine breaks and they slap into each other.
2. The lining trees have thousands of miniature bulbs sprouting along their trunks. As you approach they blink open, like giant eyes following your movement. [I]
3. As you walk, trees become thinner on either side. They are evenly spaced like rows of crops.
4. The waterline begins to inch upward. Suddenly, you can't feel the ground. You swim forward until the water is waist-high again.
5. On either side of the path, trees spear the sky above while long pointed leaves take aim at you. [I]
6. You notice random starfish-like creatures cling to the trees. They palpitate quickly, sucking at the bark.

Heavy Foilage Descriptions 19.3

1. Thousands of white orbs dangle from the branch extremities. Suddenly, the fruits fall. They explode on impact, hurling pebble-sized seeds across the jungle floor.
2. The largest trees have several stilt-like roots growing out of their trunk. The highest roots reach 13 feet tall, and they are bent like mantis legs, ready to spring forward. [I]
3. Endless vines loop down from somewhere high in the canopy. To move, you must heave them aside. Some mush in your hands as you push through.
4. Cylindrical fruits hang like punching bags. The sacks are attached by thin strings to the branches above and must weigh hundreds of pounds.
5. It smells like a combination of rotten eggs and cat piss.
6. Tree limbs gnarl down from the skies. Knotted and rough, water floods down them in a twisted slide. [I]

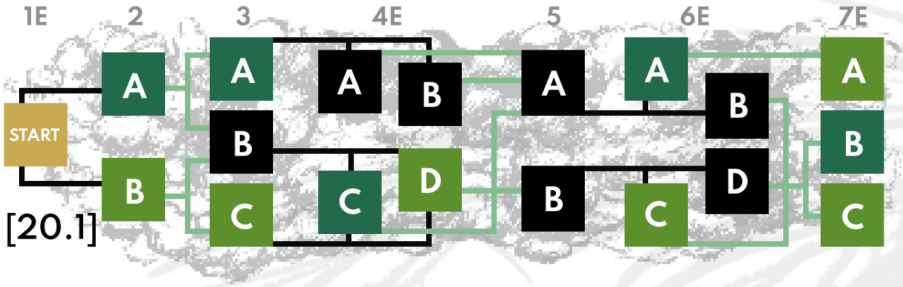

Complete Darkness Descriptions	20.2
1.	You can't see. The ground vibrates at your feet and the only sound you hear is the giant faucet of heavy rainfall.
2.	Layers of heavy leaves erase the light above. As you make your way, they melt, falling on top of you in a black sludge.
3.	The air turns cool as you stumble forward in the darkness. It feels like you're digging through leaves to move forward.
4.	The water is higher. Floating plants rub against your palm.
5.	You smell the musk of rot. The mud beneath feels like it's tightening its grip around your shins. [I]
6.	There's a sweet fragrance in the dark. As you decipher the scent, you're wrapped by what feels like tightly woven vines. [I]

Jungle Encounters		20.3
d20	Dif.	Threat
1	1	Ground caves in, PCs sucked into a water drain [I]
2-3	1	60 aquatic chisel ants with paralytic mandibles [I]
4-5	1	Fungal spore explosions
6-9	2	Carnivorous pitcher plant. Jagged teeth and thorned vines. Bears fruit. If beaten, roll [1.2].
10-14	2	Venusian scout pair. If beaten, roll twice on [2.1].
15-16	2	Poison spore traps explode directly overhead [2.2]
17-18	2	Stinging nettle moss. If touched, roll [3.1].
19-20	3	Venusian soldier ambush (3 soldiers). If beaten, roll 3x on [2.1].

Ground caves in 21.1

> **Illusion:** Players suffer psychological damage.

Aquatic chisel ants 21.2

> **Illusion:** Players suffer psychological damage.

Fungal explosions 21.3

> **Fragile but Regenerating:** Massive bobbing toadstools explode from rain and immediately regrow.
> **6ft radius:** Spores fly evenly when the toadstools explode.
> **Poisonous:** If hit, roll [2.2].

Carnivorous plants 21.4

> **Trapping:** Thorned vines quietly move across the jungle floor. Lodges into unsuspecting prey.
> **Constricting:** Attempts to choke its prey before melting them away in one of its mouths, located in the center of its flower.
> **Fruit-bearing:** If defeated, roll [1.2].

Venusian scout pair 21.5

> Reference Venusian scouts [8.1].

Poison spore traps 21.6

> **Triggered:** Knotted vines conceal poisonous spores. If players push through these vines, the trap is triggered.
> **Hidden:** Players can not easily distinguish trap from other vines.
> **Poisonous:** If hit, roll [2.2].

Stinging nettle moss 21.7

> **Causes hallucinations:** Rolll [3.1]
> **Rapidly spreads:** Once attached to a moving object, it will rapidly spread around the surface.

V. soldier ambush 21.8

> Reference Venusian soldiers [7.2].



PHASE 2: BACK AT THE ROCKET

Narration 22.1

You break past the last wall of jungle and find yourself in a clearing. Tall reed grass stretches past your eye level.

The rain continues to beat on you as you wade through the reeds. Ray yelps in excitement, "A sun dome! The sun dome is here!"

He springs forward, arms above screaming in joy.

As you push past the reeds, Ray is dancing. Not in front of the sun dome, but in front of your rocket. Odin-Harthbringer.

Environment 22.2

Odin-Harthbringer lays on its side.

Stinging nettle moss **[21.7]** is climbing up and around its underbelly. The same fungus has nearly consumed two dead men you recognize as friends. As soon as it flowers, the fungus turns dark as if to die. New fungus immediately erupts out, multiplying the space it covers.

Facilitating Phase 2 22.3

- The GM will use one d20 as a timer for Phase 2, starting with the "20" face up.
- Any actions the players take will lower the dice by 1.
- Actions include snapping Ray out of his illusion, surveying the area, searching their dead friends, gathering items from the rockets etc.
    - To slow players down, we recommend placing 2-4 traps **[4.1]** on the map. Some trap placement ideas include a pitfall trap in front of the rocket entrance, urchin mines scattered throughout the rocket, or poison spore traps hidden along the clearing's entry points.
- **When the dice reaches 10**, the players begin hearing The Storm approach. The sounds intensify as the dice lowers.
- **Once the dice reaches "1"**, the storm is upon them and Phase 3 begins.

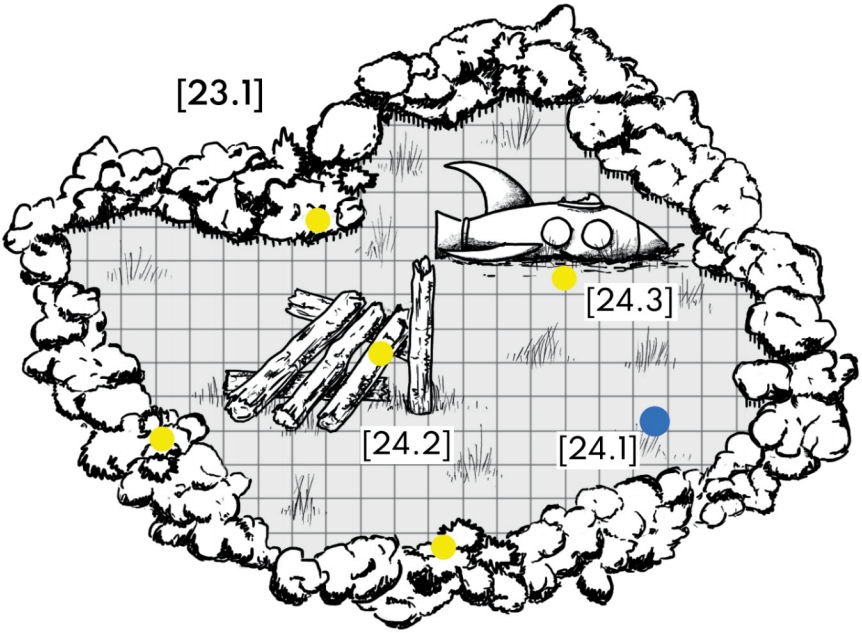

GM NOTE 23.2

Two alternatives to rolling on the "Equipment in the rocket" table **[24.3]**.

- The GM may disclose the list of equipment in the rocket. This allows players to "remember" what was left and have more control of what equipment they receive during the phase.
- Ask players if there is any equipment their character would have had on the rocket. These items can be "found" with GM approval or replaced with a similar item from the tables.

Trap notes [4.1] 23.3

Searching dead companions [4.6] 24.1

Odd Pile of Boulders and Trees 24.2

Geometrically piled trees and boulders. Circles of berries are placed in various places on the interior. **If disturbed, players will trigger poison spore traps [4.2].**

1-5	White berries **[1.2]**
6-11	Gray berries **[1.2]**
12-20	Black berries **[1.2]**

Equipment in the Rocket 24.3

Upon searching the rocket you notice it's nearly full of water.

1	Seat belts
2	Broken walkie-talkies
3-4	Sawtooth shovel
5-7	Proton Musket IV **[5.3]**
8-10	Boom Cannon IX **[5.4]**
11-14	Med kit. Contains rubbing alcohol, bandages, and glass bottle labeled "Anti-toxin"
15-20	Grenade tote (2-4 grenades) **[6.2-6.4]**

Grenade Tote on Odin-Harthbringer 24.4

1-6	Paralysis grenade **[6.2]**
7-12	Miss VE's grenade **[6.3]**
13-20	Concussion grenade **[6.4]**

Guns and grenades notes 24.5



PHASE 3: FIGHTING THE STORM

Narration 26.1

Sharp white lightning splits the sky. In moments a loud crack bellows.

You whip your head toward the thunder and see it. A black behemoth towering over the jungle moves toward you.

It moves with electric blue legs. Wherever it walks, the vegetation catches fire before being put out by the rain. As it nears, the smell of burnt wood fills the area.

Environment 26.2

Thunderous clouds blanket the sky in darkness. Debris crashes through the treeline. Lightning constantly strikes the ground.

Facilitating Phase 3 26.3

- The storm is real. However, its personification is an illusion. As the storm approaches, players may take cover or remain in the clearing.
- The storm battle lasts 1-3 rounds of combat, after which the storm passes.
- Players take actions before the storm. The storm's reaction to players' attacks is found on **[27.1]**.
- At the end of each round, the storm will attack players from table **[28.1]**.
  - Player's choice in cover affects how well they are able to avoid being hit by the storm's attacks. There are two methods available. First, they can actively dodge attacks. Second, they can try and shield themselves with cover. **[27.2]**
- After the storm passes, players will be unable to find anything from **[24.1]**, **[24.2]**, **[24.3]** or **[24.4]**. The storm has cratered the ground and dug trenches to reveal remnants of another rocket from Earth. Parts of the newly revealed rocket have been flung across the clearing **[28.2]**.
- **After Phase 3, PCs will need to navigate South to SD-021.** To do so, use any number of jungle transitions **[41.1]** **[41.2]** until they reach Phase 4, "Traversing Torrents".

Storm Reactions to Player Attacks	27.1
1.	Thunderous screams boom across the land.
2.	Bullets blast holes through the monster as sparks of lightning reattach its broken body.
3.	The sound of rapidly splitting wood hisses through your ears like arrows.
4.	The entire clearing is cast in shadow as the monster wails.
5.	Nearby trees crack, burst in fire, and timber down as the monster howls.
6.	Sounds of pain turn to wheezing growls. Lighting gathers across the chest of the storm.
7.	The air around you is heavy with the smell of charred wood and dying matter. Smoke makes it hard to see.
8.	Thunder cracks across the clearing. It pounds the earth like giant rolling pins.
9.	The monster lunges forward, its open mouth scraping against the ground. It roars. Trees buckle as the sound reverberates in your ears.
10.	A hole rips across the monster's stomach. Its bowels tumble out in blue light. The monster begins to topple, but uses its giant knee to catch itself. It pushes itself up with newfound strength.
11.	The monster roars with its tongue whipped outward. Spit blasts your face, like a gallon of cold ice water slapping across your face.

EVASION DIFFICULTY BASED ON TERRAIN	27.2
1.	**Remain in clearing:** High mobility (advantage to saves, extra damage if hit).
2.	**Take cover in jungle:** Likely to be hit by debris (disadvantage to saves, extra damage if hit).
3.	**Take cover near wood pile:** Effective against debris (advantage to saves. If failed, lower damage).
4.	**Take cover near rocket:** Will shield well against debris (advantage to saves. If failed, lower damage). Will conduct electricity (severe damage if rocket is hit by lightning).

The Storm Combat Descriptions	28.1
1.	Debris shoots from the jungle. Boulders, chunks of trunks, and vines come hurtling toward you.
2.	Arms of lightning throw entire trees at the players.
3.	The monster grabs massive vines and whips them towards you like giant bolos.
4.	Lightning pierces the ground. Chunks of Venus explode in all directions, spraying the area with rocks and clumps of clay.
5.	Lightning skirts across the field. It suddenly bounds up, surrounding you.
6.	Fists of thunder knock you flat. You hear nothing but ringing as your vision darkens.
7.	Lightning is hurled across the clearing, plowing the ground in jagged lines.
8.	Spiky streaks cut the sky as lighting bolts are thrown at your feet.
9.	A net of light flashes past. It ropes the tree line behind you, pulling the grove back towards you.
10.	Flash bangs explode around you. You regain consciousness as you splash the heavy mud.
11.	Heaps of lightning craters the ground near Odin-Harthbringer, mud and clay blasting in all directions.
12.	Hands of light rip Odin-Harthbringer apart. Metal plates are thrown at you like ninja stars.

AFTERMATH OF THE STORM FINDINGS	28.2
1.	A bolted metal plate reading “Odin-Allfather”. (A remnant of a past ship, initially buried from under the earth.)
2.	A frozen screen reading, “Mayday, mayday, mayday! Reaction control system is failing. I repeat, the reaction control system is failing.” **[PDF Artifact 2]**
3.	The nose of a rocket ship, Odin-Allfather, emerges from the earth, turned upside down. Some of the plating is peeled away. Cut wires and black residue fill the interior.

PHASE 4: TRAVERSING TORRENTS

Narration 29.1

You hear the sound of rushing water crash against the jungle's edge. Pushing through the foliage, you see a giant waterway blocks your path, zigzagging southward.

"Finally. I think that's it, down there." You follow Ray's line of vision, down the river, past rigid rocks. In the far distance, across the river, you see a steel reflection.

Environment 29.2

A clearing lies at the bottom of an uneven hill. The distance is separated by a huge, fast-moving, and winding river. A steel reflection can be seen, located somewhere in the clearing.

Facilitating Phase 4 29.3

- The speed of the river limits players to one action per square. The raft moves to the next square after all players take their actions.
- **Circles on the map suggest areas for river encounters.**
- Squares marked "C" represent calm water. Player interactions are found on **[31.2]**.
- Squares marked "R" represent rough water, where players are at risk of capsizing. Players must roleplay through three types of rough water: Rapids, Bends, and Waves. **[30.2]**.
- After players choose how to navigate the water, **the GM will assign a "capsize threshold" between 1-10 based on their choice**. Suggested capsize thresholds for each type of rough water can be found at the top of **[30.2]**, denoted by a number in parentheses.
    - **Note, players will have to choose between steering or fighting during combat.** If they do not steer, the likelihood of capsize increases.
- The last player of the turn will roll 1d10 after their action to determine if players stay afloat. **Their raft capsizes if they roll below the "capsize threshold"**.
    - The GM will roll a consequence **[31.1]** when the raft is first capsized. While capsized, players are at a disadvantage in all actions. All players must invest their action to right the raft.

START [30.1]

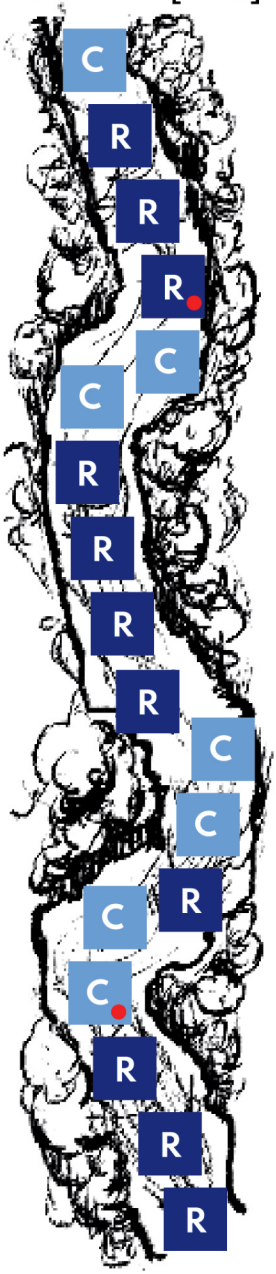

Rough Water Squares (R) 30.2

- **Rapids:** Paddling into rapids decreases the chance of capsizing (4). Trying to slow down while entering rapids increases the chance of capsizing (7).
- **Bends:** The current is fastest on the outside of the bend. Paddling with the current is best (2) while switching sides will increase the chance for capsizing (6).
- **Waves:** Paddling head on into waves is the safest way to navigate (2). Trying to avoid waves, may leave the raft horizontal to the waves which will cause capsizing (9).

1. [RAPIDS] Jagged rocks pierce through the river ahead. Water crashes white across the tops. The water appears less turbulent on the far side.
2. [RAPIDS] Rapids lie ahead, with water spraying high in the air.
3. [RAPIDS] The raft plunges down a small waterfall. You barely glimpse the rapids while falling.
4. [BEND] The river reaches a sharp turn creating a whirlpool.
5. [BEND] Large branches whip around the outside of a narrow river bend.
6. [WAVES] Your raft is on course to hit massive waves head-on.
7. [WAVES] A sudden undertow yanks the raft, twisting the vessel into an oncoming wave.
8. [WAVES] Passing a slight bend in the river, you find yourself heading sideways into an oncoming wave.

Capsizing Consequences	31.1
1.	The water pushes your head against the riverbed and pins your limbs to your sides. [I]
2.	Tumbling into the water your body slams against rocks.
3.	Barbed roots grip you, pulling you under the current. Debris batters your body. [I]
4.	Water floods into your mouth. As you clench your jaws, you feel worms wiggling against your cheeks. [I]
5.	When you go overboard, you feel something snag and rip away. You realize you just lost something. [**Lose an item**]

Calm Water Squares (C)	31.2
1.	Several black, disk-shaped frogs float with their toes stretched outward. They smell sweet. As you drift past, your eyes want to close and you find yourself smiling. If touched, roll [**1.2**].
2.	There are patches of black water in this part of the river. If inspected, PC's see swatches of huddled tadpoles. If touched, roll [**1.2**].
3.	A translucent toad is relaxed on a lily. If touched, players experience a short, powerful trip. Roll [**1.2**].
4.	Heavy steam begins to rise from underneath the raft. Halos of light hop across the boat. If touched, roll [**1.2**].
5.	A plump gray toad with a milky underbelly is calmly sitting on a tree trunk. It is, somehow, moving faster than you and begins to pass within arms' length. If touched, roll [**1.2**].
6.	Black stick-shaped frogs leap across the river in ribbons. If touched, roll [**1.2**].

River Encounters		31.3
d20	Dif.	Threat
1-5	2	Jaguar Shark
6-10	2	2 Venusian scouts ambush from under the raft [**8.1**]
11-15	3	The Devil's Stingray. If stung, roll [**3.1**].
16-20	3	River Gargantuan



Jaguar Shark 32.1

Large-headed fish with formidable canines and heavy molars. Its tapered body is mounted by a sharp dorsal fin.

> **Behavior:** The Jaguar Shark stalks its prey in short bursts until it has a clear chance to strike. The dorsal fin can be seen from above as it approaches.

> **Reactionary:** Attacks anything that moves near them. May attempt to pull PCs into water. Will attack capsized PCs.

> **Piercing:** Rows of teeth cause severe damage.

Two Venusian scouts 32.2

> Reference Venusian tank [**8.1**].

The Devil's Stingray 32.3

Silver circles arrange beneath you. A speared tail curves towards you from the rear, and a pair of devil horns emerge in front.

> **Behavior:** Swims beneath the raft while attacking with its tail.

> **Nightmare Injection:** Scorpion-like tail causes a 3 second slumber. Victim suffers a nightmare. If struck, roll **[3.1]**.



River Gargantuan 33.1

An ivory giant slams against the riverbank. Debris swirls the raft as the foul, crooked monster turns to face you.

> **Plated:** Impervious to direct attacks.

> **Scotopic vision:** Highly sensitive to any form of light. WIll reel away.

> **Disrupted Water:** During combat, calm water spaces (C) will become rough water spaces (R), with the Gargantuan creating massive waves.

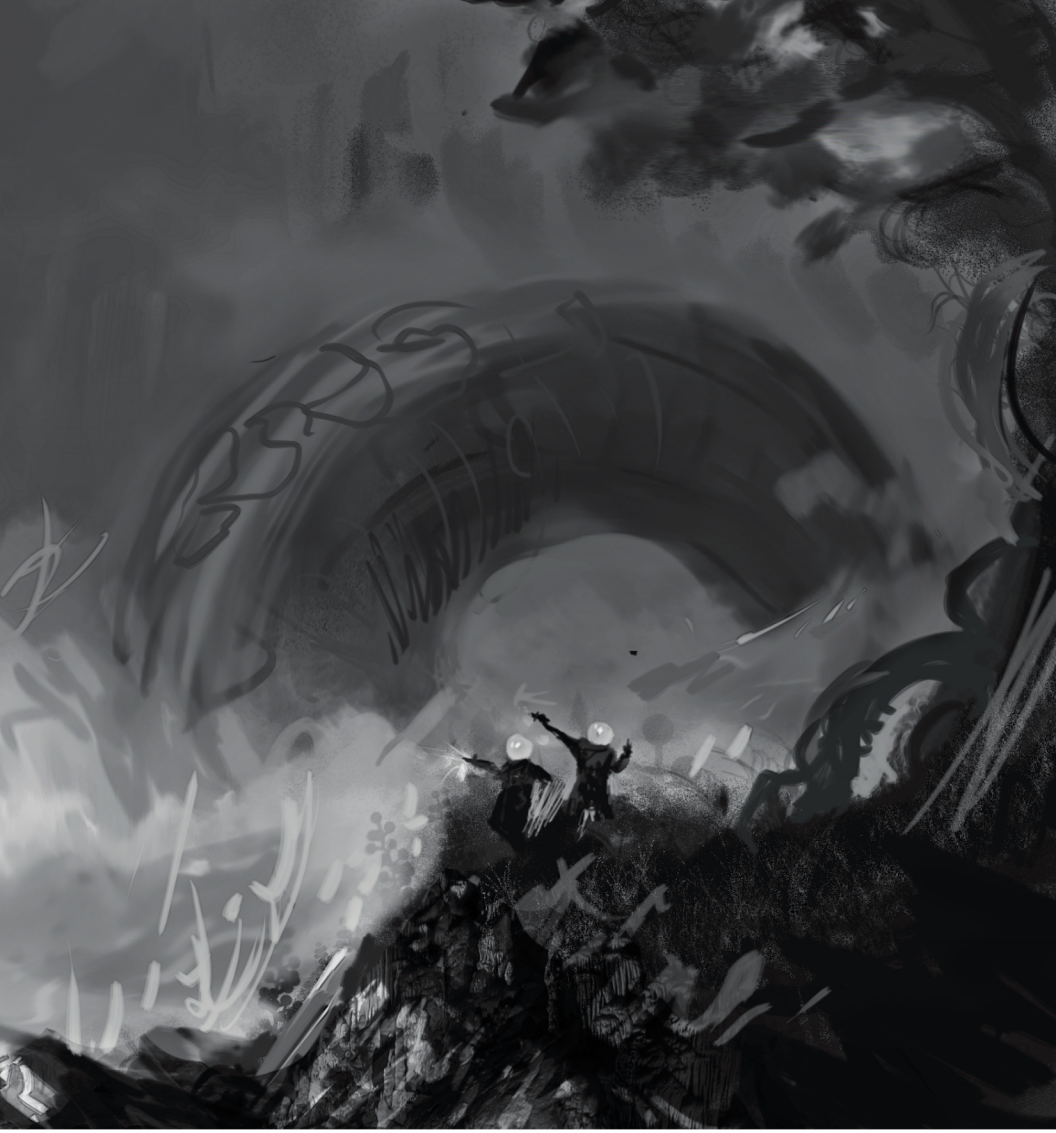

GM DIFFICULTY NOTE 34.1

Two encounters should prove difficult. You can adjust the difficulty by changing the number of encounters or length of the river.

PHASE 5: SD-021. THE SUN DOME!

Narration 35.1

The sun dome glows against the gray of Venus. Even from this distance the gentle warmth reaches you. Ray smiles for the first time since you've landed. You forget for a moment that the rain is still slapping you.

Environment 35.2

A glowing sun dome, about a half-mile away, lies on the other side of the clearing. The clearing itself has short grass. Looks like a nice walk.

Facilitating Phase 5 35.3

- Players will face 1-3 small clearing encounters before reaching the sun dome.
- Once players reach the sun dome, they will realize it is destroyed. Ray becomes despondent. When players return to him, they will notice that he is no longer there.
  - To increase the danger, we recommend placing 3-5 traps **[4.1]** inside the sun dome. Some trap ideas include: crushing iridium stones balanced on slightly open doors, urchin mines tucked under dead soldiers or behind doors, and pitfall traps in room entrances.
- **Inside the Officers' Quarters, players will find a map to SD-022. They can reach it by either cutting through the jungle [41.1] [41.2], or continuing down the waterways [43.1] [43.2].** Use a number of transitions to get to Phase 6.

Small Clearing Encounters 35.4

d20	Dif.	Threat
1-3	1	Living cordgrass, whipping, twisting, constricting [I]
4-6	1	Mud reaches up and grabs hold of your boots. It pulls you down into the dark Venusian clay. [I]
7-11	2	14 Hopping Wasps **[2.2]**
12-18	2	Giant plated centipede **[2.2]**
19-20	3	Two Venusian tanks If beaten, roll twice on **[2.1]**.

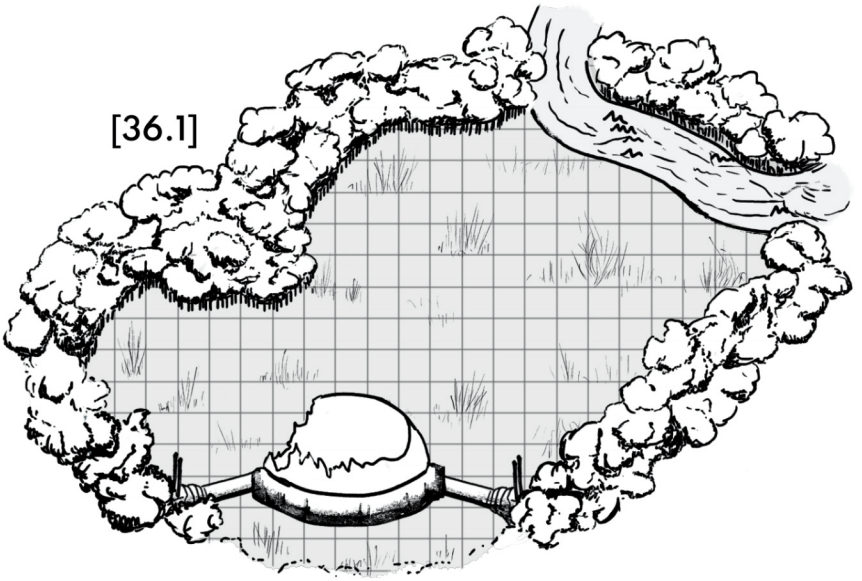

Living cord grass 36.2

> **Illusion:** Players suffer psychological damage.

Mud drowning 36.3

> **Illusion:** Players suffer psychological damage.

14 Hopping wasps 36.4

> **Behavior:** Attacks in swarms, targeting the nearest PC. Will not retreat.

> **2 ft. Slender with thick wings** Wings rest firm against the wasps' bodies when not in use.

> **Venomous:** If stung, roll [2.2].

Giant centipede 36.5

> **Behavior:** 13 ft long. Stands 10 ft. tall over players like a cobra. Bears internal teeth, which emit a horrific grinding sound.

> **Plated:** sharp-edged, hard exoskeleton.

> **Burrowing:** escapes into the ground and pops out.

> **Venomous mandibles:** If bit roll [2.2].

Two Venusian tanks 36.6

> Reference Venusians [8.2].

Narration 37.1

The heavy door is slightly ajar, letting through the smell of fresh bread and rich spices. You enter eagerly. Four steps in, your vision adjusts. The air is stale, chilly, and scentless. There is no sun. There is no food, nor warmth. You look up to where the sun should be. The ceiling is black and bashed holes let the rain in.

Ray silently walks outside. He closes his eyes, head hung low. You watch him collapse to his knees as the rain falls on him.

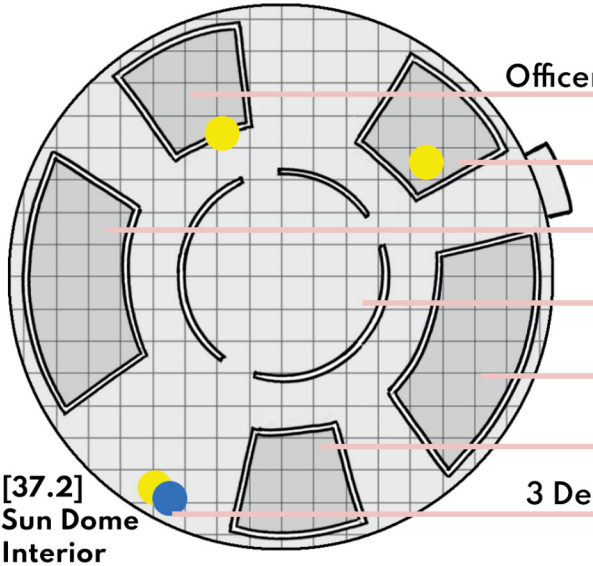

Searching dead soldiers [4.6]	37.3

Kitchen, Lounge, and Rec Room	37.4
Nearly destroyed and completely ransacked.	

Barracks			37.5
1	Soaked blankets	11-13	Grappling hook
2	Sewing Kit	14-15	Flare gun
3-4	2 Rafting oars	16-17	The Mantis [5.2]
5-6	80 ft. corded rope	18	A letter to a colonel [PDF Artifact 3]

Armory: Guns and Grenades 38.1

The armory is trashed. With close inspection, players can discover weapons in the rubble. Suggested 1 per PC.

1	The Mantis **[5.2]**
2-5	Paralysis grenades **[6.2]**
6-9	Miss VE's grenade **[6.3]**
10-13	Concussion grenades **[6.4]**
14-17	Proton Musket IV **[5.3]**
18-20	Boom Cannon XIII **[5.4]**

Officers' Quarters: Experimental Stim-packs 38.2

A secret compartment is hidden behind a bookshelf. Incomplete documents reveal these stim packs have gone through many iterations and are distilled from Venusian blood, with no mention of their effects. 1 per PC (May roll separately for each stim pack). **A map with coordinates to a nearby sun dome, SD-022, lies amongst a pile of papers unaffected by the rain.**

1-5	Crustacea No.15 **[6.5]**
6-11	Bolt No.22 **[6.6]**
12-16	Hulk No.17 **[6.7]**
17-20	Venusian Complete No.29 **[6.8]**

Guns, grenades, and stim-pack notes 38.3

Trap notes [4.1] 38.4

PHASE 6: SALVATION AT SD-022

Narration 39.1

SD-022. Glowing across the field of tall grass. The rain batters you.

As you near, you notice a number of figures approaching the sun dome. Squinting through the rainfall, you make out a small Venusian formation, some 40 meters away preparing their attack.

Environment 39.2

The sun dome lies ahead. A small Venusian formation slowly advances towards SD-022, avoiding the notice of the posted guards. They haven't perceived you behind them, crouching among the cordgrass.

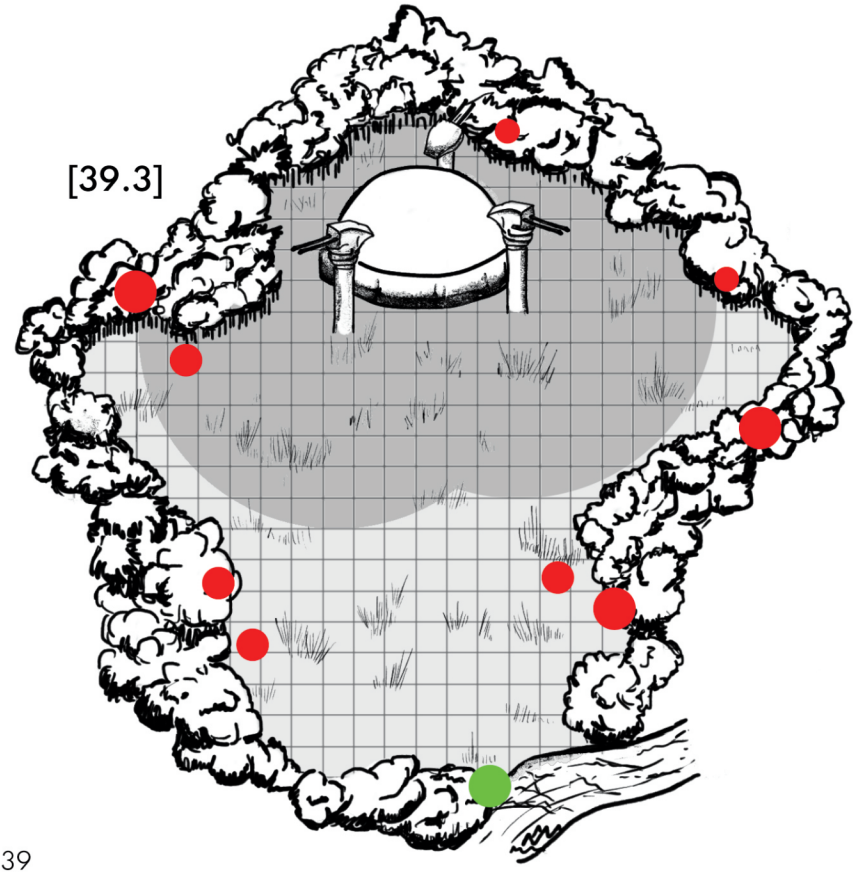

Facilitating Phase 6 40.1

- Players start on the green dot. Red dots represent Venusians. Dots are sized according to Venusian types (scouts, soldiers, tanks).
- Each square is 5 meters. **Venusians move 1 square towards the sun dome every turn until alerted.** Venusians 15 meters from the sun dome will not move until the full party is close enough to attack.
- If players want to sneak up on the Venusians, they will need to overcome their sonar senses. Moving through the jungle will increase the chance of being heard.
- Once combat starts, the four sun dome turrets will aid players. Turrets have a range of 50 meters and can shoot two targets on a single turn. Venusians will react depending on proximity:
  - Venusians 20 meters or closer to the sun dome will sprint attack the turrets unless they are in the immediate striking range of a player character.
  - All other Venusians will attack player characters. They attack with complete disregard for the turret fire.

Venusian Battle Notes 40.2

> Venusians may hurl their iridium weapons at turrets.

> Venusians may use dead soldiers and Venusians alike as flesh shields when charging the sun dome.

> Venusian weapons are strong enough to crash through the wall of the sun dome. They may use this tactic to avoid turret fire and attack the turret from the inside of the dome.

> Venusians may catapult each other up the sun dome to attack turrets more quickly.

JUNGLE TRANSITIONS

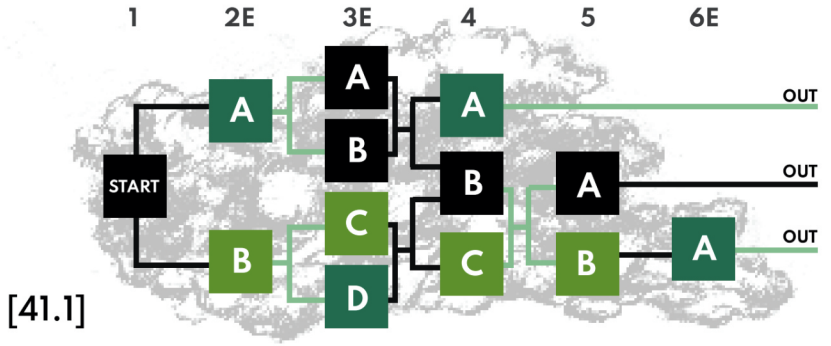

[41.1]

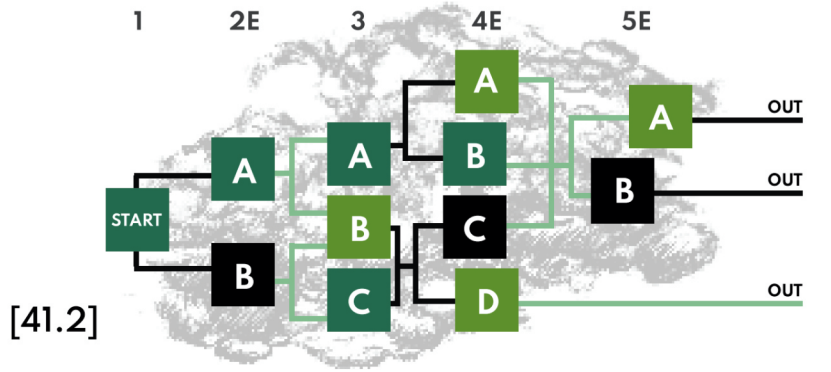

[41.2]

Narrow Walkway Descriptions	42.1
1.	A sweet smell, almost like honey, fills the air. Dozens of flowers slowly open their petals. A putrid scent releases, engulfing you in thick, harsh air.
2.	The trees' branches plunge straight into the ground. You can see water pump up them, like giant arteries.
3.	There is a heavy fog. It is hot and dense to walk through.
4.	A visible mist swooshes upwards, replenishing the clouds above.

Heavy Foilage Descriptions 42.2

1.	The plants here have huge clamps for heads. They slowly open, revealing gaping mouths before slamming shut.
2.	Massive ferns, ten feet across and five feet tall are littered across the ground. There are numerous holes bored into the large leaves.
3.	Giant hanging pitcher plants fill with water overhead. As they fill, they spill buckets across the foliage.
4.	Thousands of daggered, fanned leaves cover everything ahead of you. They saw through the air as the rain beats against them. [I]

Complete Darkness Descriptions 42.3

1.	Everything feels numb. Rain echoes through the darkness.
2.	The vegetation is thick and pungent. It's impossible to not taste the rough, salty leaves.
3.	Stepping through the lightless canopy, you feel the spikes of teeth in the ground, and hot breath wafting across your skin. [I]
4.	The jungle turns dark. You can't see. Thorned branches catch and pull at your suit.

Jungle Encounters 41.3

d20	Dif.	Threat
1-4	1	Your legs plunge through the muddy ground. Vines tighten around your ankles and yank you beneath the watery surface. [I]
5-8	1	Urchin mine field. If touched, roll [**2.2**].
9-11	1	Fungal spore explosions. Poisonous [**2.2**].
12-14	2	A single Venusian tank, pushing and bending trees, clearing foilage, and making what seems to be a narrow walkway. If beaten, roll [**2.1**].
15-17	2	Venusian scout pair. If beaten, roll 2x [**2.1**].
18-20	3	A foul-looking Venusian bears fangs and rhythmically pounds its weapon against the ground. If engaged with, the creature will lunge at the player, consuming their entire body. Suffer a hallucination [**3.1**] It disappears in a cloud of mist.

WATERWAY TRANSITIONS

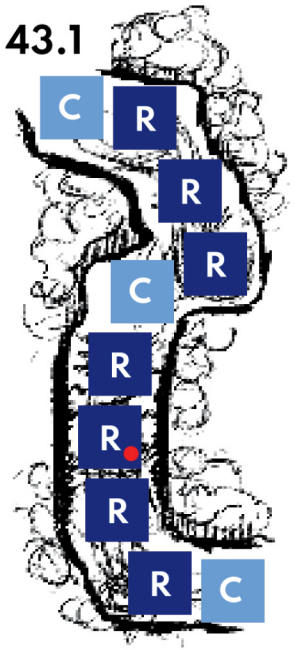

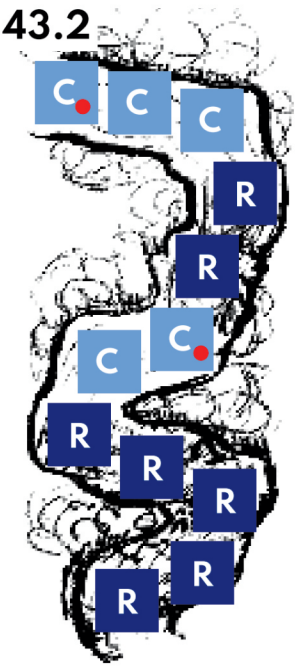

Rough Water Spaces	43.3
1.	[RAPIDS] The water is dark and emits a sulfuric odor. Rocks pierce through the turbulent water.
2.	[RAPIDS] Your raft crashes against the riverbank. The raft spins, and its side is now exposed to oncoming rapids.
3.	[BEND] The wind whistles in your ears as the slope steepens in a wide curve. The river pushes you towards the inside.
4.	[BEND] As the raft rounds the bend, the water smells of decay. You are dragged towards a whirlpool draining water on the inside of the curve.
5.	[WAVES] The spray of water tastes acidic. Waves crash on all sides of the raft but pale in comparison to a large swell coming from the right.
6.	[WAVES] Dropping down a small series of cascades, the waves taste metallic and smell like burning steel. At the bottom, waves crash from the right.

Capsizing Consequences	44.1
1.	You're raft flips and you grind against the riverbank. [**Lose an item**]
2.	The waves batter your face as you fall out of the raft. They tumble you like laundry before you emerge again.
3.	Gargantuan hands grab you around the neck and slam you against the riverbed, burying you beneath the sediment. [I]
4.	You hit the water. It feels like concrete. As you lift your head you see the whole river come crashing down on you. [I]

Calm Water Spaces	44.2
1.	The frogs' black eyes conceal into their skin. They dive deep into the river before popping back up. If touched, roll [**1.2**].
2.	Dense fog laces the air. Bouncing totems of light form on the riverbank, moving inward to the middle of the river. If touched, roll [**1.2**].
3.	Ovals of glowing water swim counter-current, advancing slowly. If inspected, PCs see tiny shoaling tadpoles. If touched, roll [**1.2**].
4.	An army of small obsidian bullfrogs bellow on the bank of the river. As your raft comes within arm's reach, the noise is nearly unbearable. If touched, roll [**1.2**].
5.	5-foot water lilies house 2-inch translucent frogs. They lie in the center with their eyes closed. If touched, roll [**1.2**].

River Encounters		44.3
d20	Dif.	Threat
1-4	1	Suckermouth Rockfish
5-8	2	A pair of Venusian soldiers leap in and out of the water, gaining speed on your raft.
9-12	2	Blunt-tooth Catfish [**2.2**]
13-16	3	Two Venusian tanks burst from the riverbank.
17-20	3	Razortooth Fang Eel

Legs plunge beneath 45.1

> **Illusion:** Players suffer psychological damage.

Urchin mine field 45.2

> Reference urchin mines [4.3].

Fungal explosions 45.3

> **Fragile but Regenerating:** Massive bobbing toadstools explode from rain and immediately regrow.

> **6ft radius:** Spores fly evenly when the toadstools explode.

> **Poisonous:** If hit, roll [2.2].

Venusian tanks 45.4

> Reference Venusian tanks [8.2].

2 Venusian scouts 45.5

> Reference Venusian scouts [8.1].

Foul Venusian 45.6

> **Causes hallucinations:** Roll [3.1].

Suckermouth Rockfish 45.7

Unbeknownst to players, suckermouth rockfish gradually attach to their raft. Water begins splashing in and the back of the raft seems to be pulled towards the riverbed.

> **Behavior:** Attaches to hosts in schools of up to 20 fish.

> **Drowning:** Pulls host to the riverbed.

> **Swarms:** Once underwater, eats communally, tearing away at larger prey.

Blunt-tooth Catfish 45.8

Three pairs of whisker-like barbels frantically feel around the raft. They begin to hang over into the raft as a mouth opens and attempts to swallow the raft.

> **Behavior:** Hides under the surface of the riverbed.

> **Wide Mouth:** Can grab 20% of raft in mouth, blunt teeth holding firm enough to throw the raft 20 feet.

> **Poisonous Barbels:** The barbels protruding from the catfish's mouth are barbed and poisonous. [2.2]

2 Venusian soldiers 45.9

> Reference Venusian soldiers [7.2].

2 Venusian tanks 45.10

> Reference Venusian tanks [8.2].



Razortooth Fang Eel 46.1

A rigid snake-like body constricts around the front of the raft. The eel's jaw emerges from the depths and snaps.

> **Behavior:** Attacks immediately. Must constantly eat.

> **Slick skinned:** Body is covered in a waxy substance that makes it difficult to grab.

> **Nightmare:** Causes nightmare at next rest [3.1].