PHASE 1: JUNGLE EXPLORATION MAP

Conversion Notes

MAP KEY [19.1]	**1E**	Roll Small Clearing Encounter [10.1]
	2, 3, 5	Share from "Description Tables" only
	4E, 6E, 7E	Roll Jungle Encounter [14.3]
	After 7E	End of the jungle. Players reach the destination they chose at the start of Phase 1.

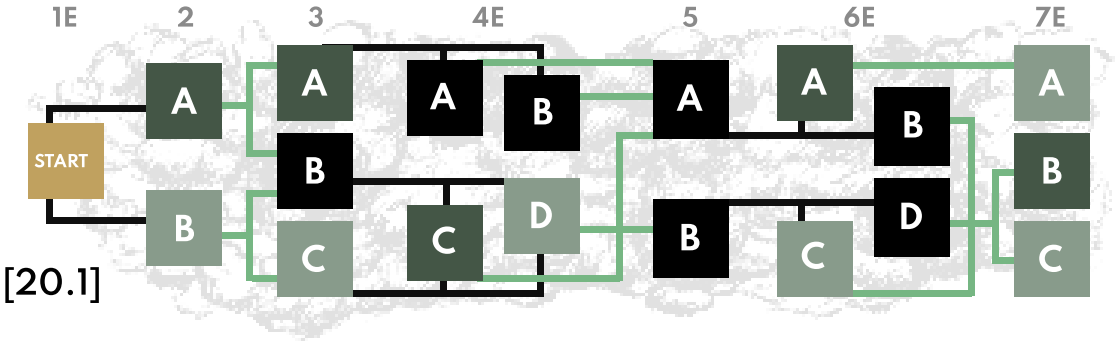

[20.1]

Phase 1: Jungle Exploration Notes PHASE 1